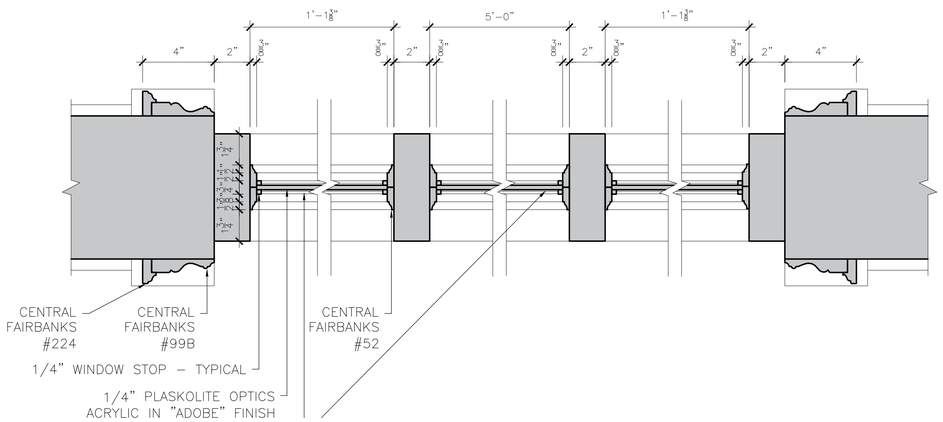

1/301 TRANSOM SECTION
SCALE: 3" = 1'-0"

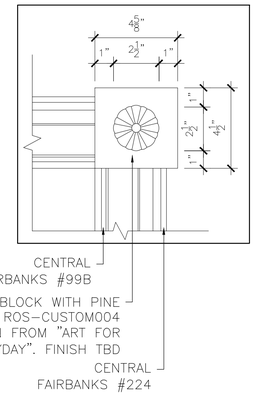

4/301 TRANSOM & SIDE LIGHT – CORNER BLOCK DETAIL
SCALE: 3" = 1'-0"

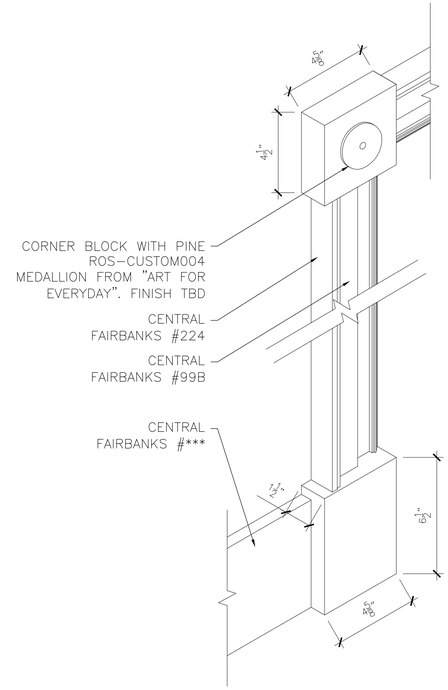

5/301 TRANSOM & SIDE LIGHT – CASING DETAIL
SCALE: 3" = 1'-0"

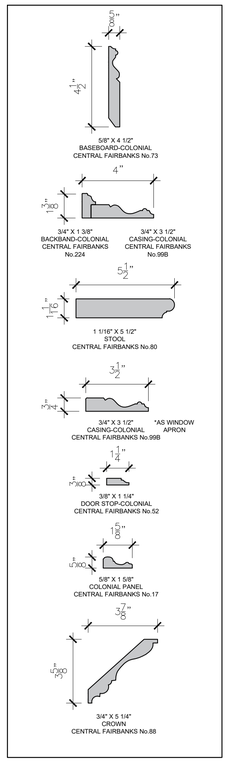

0/301 TRIM LEGEND
SCALE: 3" = 1'-0"

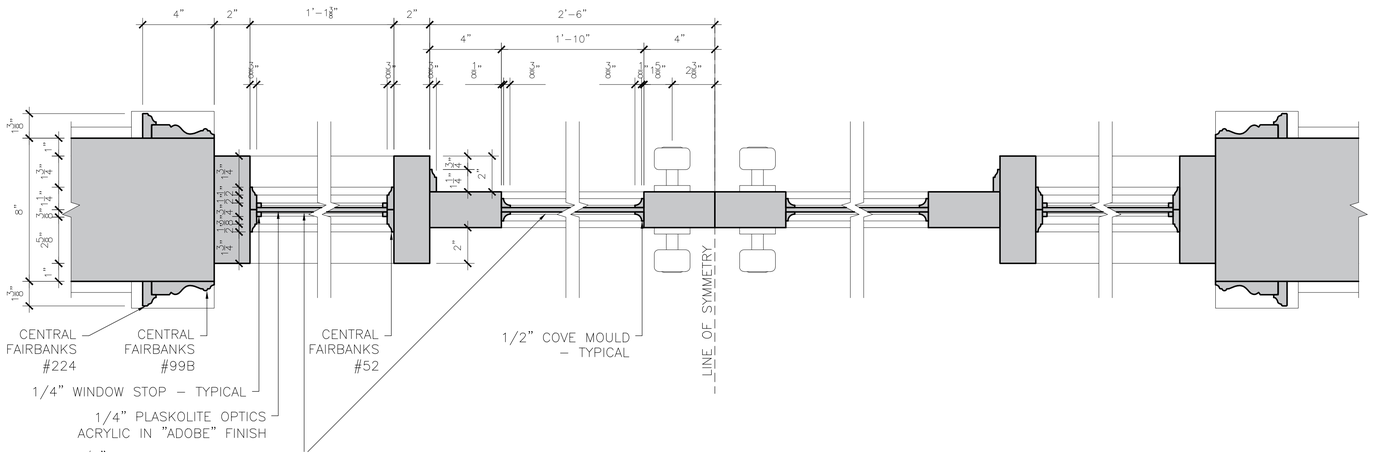

2/301 UPPER SIDE LIGHT & DOOR SECTION
SCALE: 3" = 1'-0"

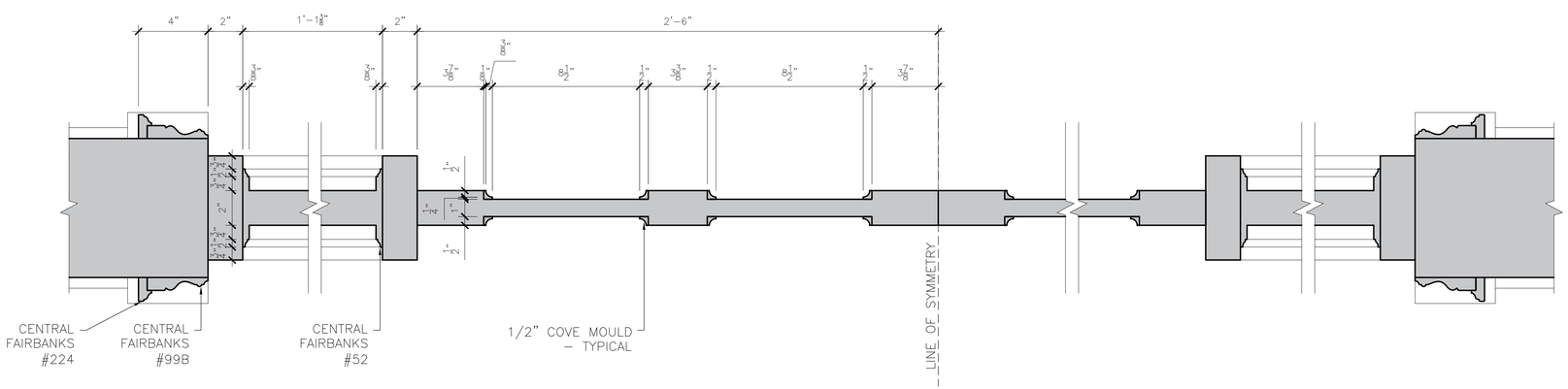

3/301 LOWER SIDE LIGHT & DOOR SECTION
SCALE: 3" = 1'-0"

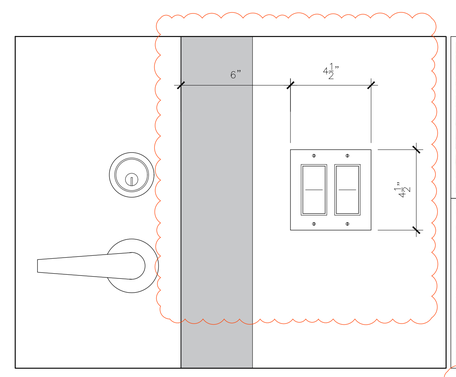

6/301 SWITCH PLATE DETAIL
SCALE: 3" = 1'-0"

- BEHIND PLATE WILL BE A BOX THAT WILL BREAKAWAY DURING SCENE. SPFX & PROPS DEPT. TO DETERMINE PARAMETERS AND DETAILS OF ALL RELATED COMPONENTS

REVISED
AUG 25/22

ORPHAN BLACK: ECHOES	ORPHAN BLACK SPINOFF PRODUCTIONS LTD. 2480 STANFIELD RD. MISSISSAUGA, ON, L5Y1S2 T: 647.689.8010	Production Designer: AIDAN LEROUX	Set name.: INT. WAREHOUSE APARTMENT	Date: AUG 03, 2022	Scale: AS NOTED	Revised: AUG 25, 2022	Revision no.: 01	Set no.: S001	Sheet no.: 301
		Art Director: ALDER DUNLAP	Location address: STUDIO	Drawn by: E.S.	Sheet name: DETAILS (PAGE 1)				